TR4500 Treadmill

GK40-00005-XXXX

S/N 545077 - 546453

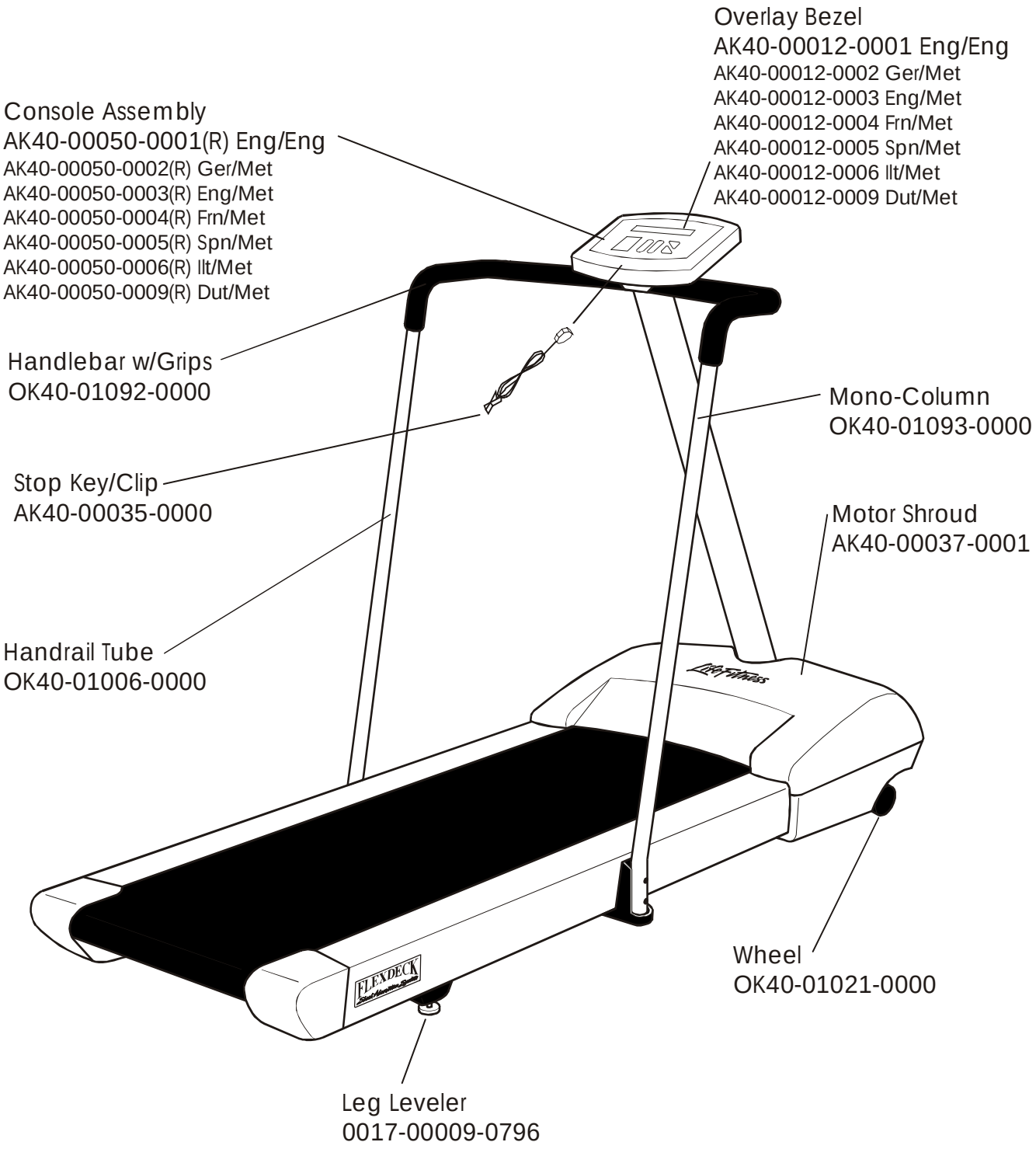

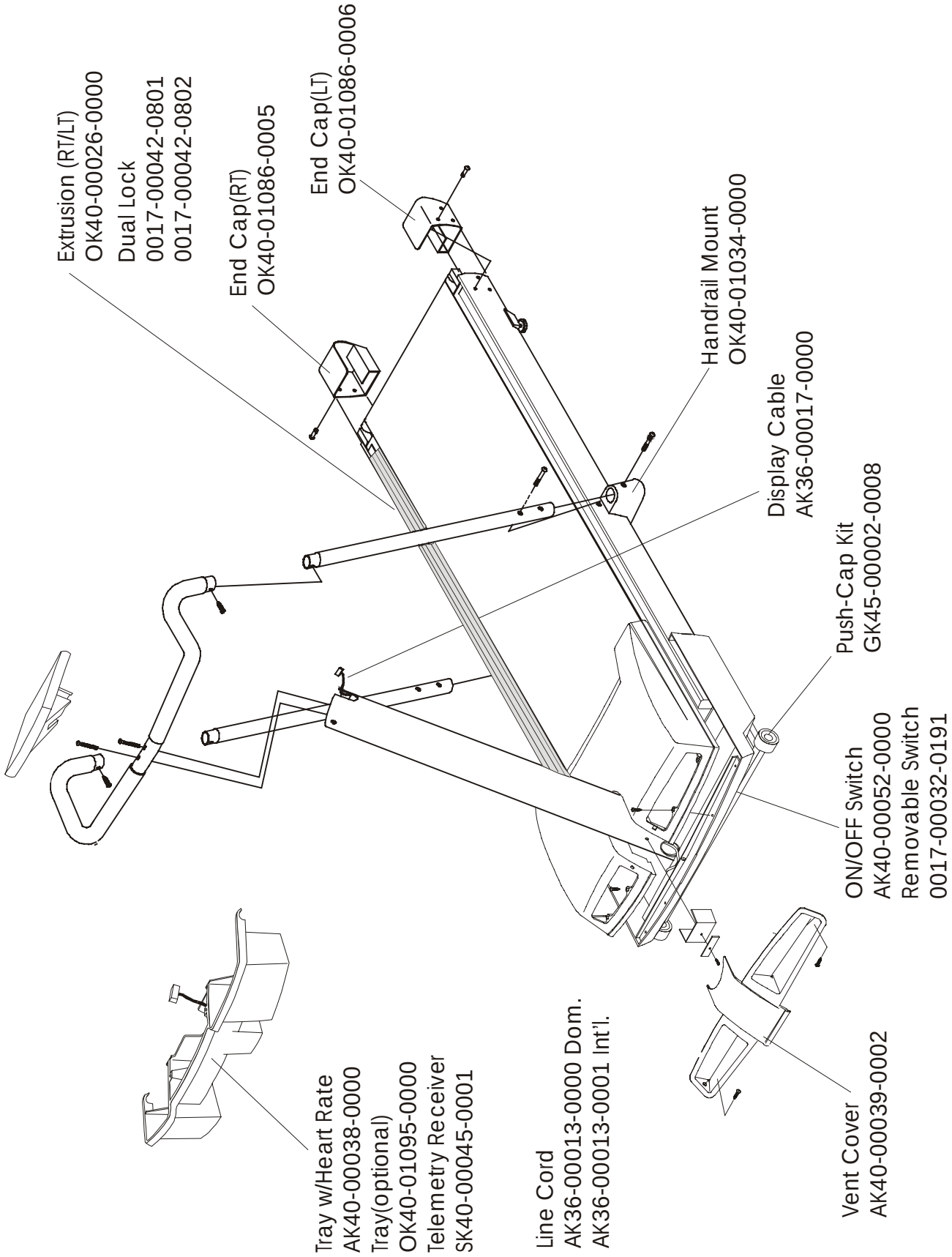
Extrusion (RT/LT)
OK40-00026-0000
Dual Lock
0017-00042-0801
0017-00042-0802
End Cap(RT)
OK40-01086-0005
End Cap(LT)
OK40-01086-0006
Handrail Mount
OK40-01034-0000
Display Cable
AK36-00017-0000
Push-Cap Kit
GK45-00002-0008
ON/OFF Switch
AK40-00052-0000
Removable Switch
0017-00032-0191
Vent Cover
AK40-00039-0002
Line Cord
AK36-00013-0000 Dom.
AK36-00013-0001 Int'l.
Tray w/Heart Rate
AK40-00038-0000
Tray(optional)
OK40-01095-0000
Telemetry Receiver
SK40-00045-0001

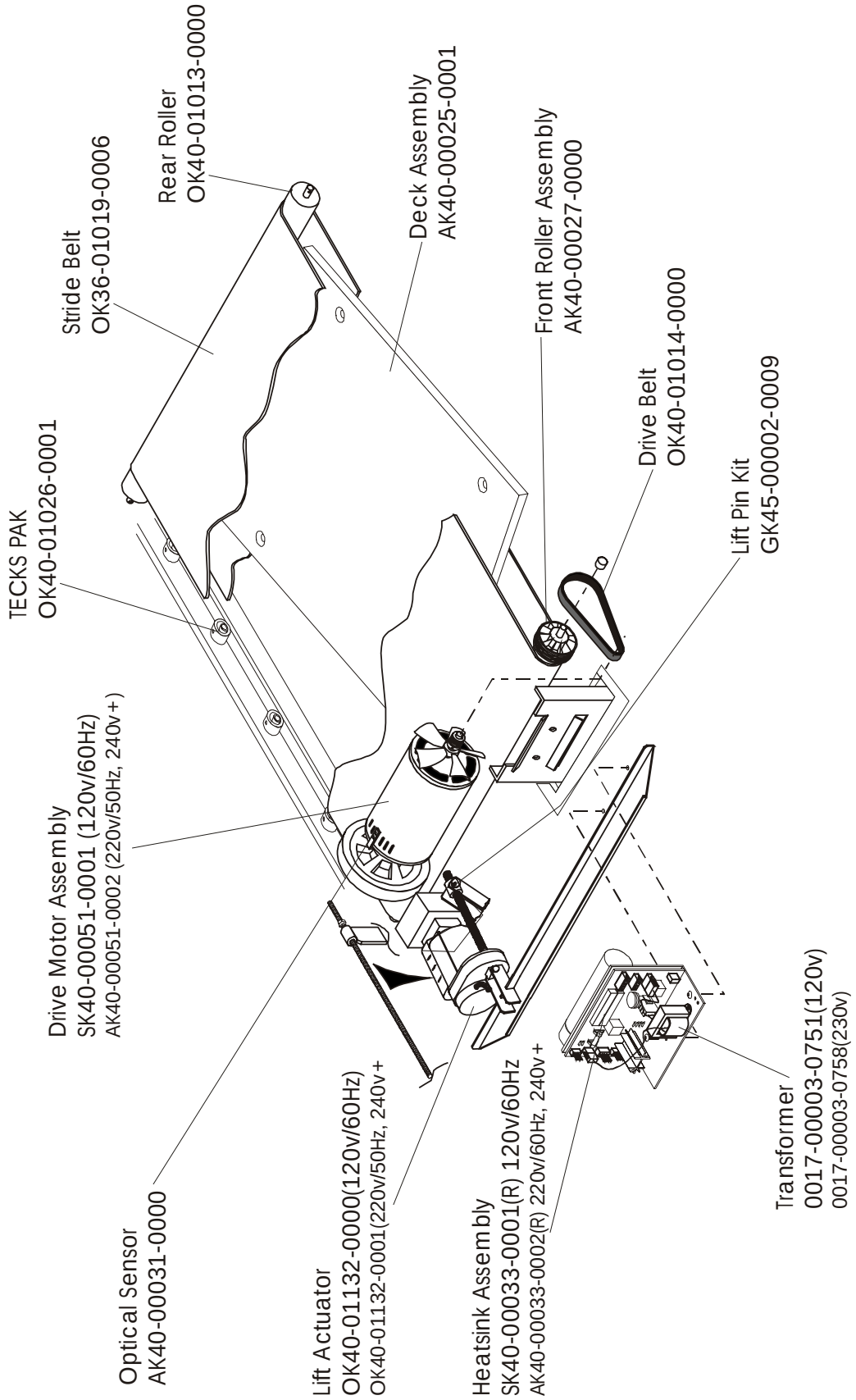
Stride Belt
OK36-01019-0006
Rear Roller
OK40-01013-0000
Deck Assembly
AK40-00025-0001
Front Roller Assembly
AK40-00027-0000
Drive Belt
OK40-01014-0000
Lift Pin Kit
GK45-00002-0009
TECKS PAK
OK40-01026-0001
Drive Motor Assembly
SK40-00051-0001 (120v/60Hz)
AK40-00051-0002 (220v/50Hz, 240v+)
Optical Sensor
AK40-00031-0000
Lift Actuator
OK40-01132-0000(120v/60Hz)
OK40-01132-0001(220v/50Hz, 240v+
Heatsink Assembly
SK40-00033-0001(R) 120v/60Hz
AK40-00033-0002(R) 220v/60Hz, 240v+
Transformer
0017-00003-0751(120v)
0017-00003-0758(230v)